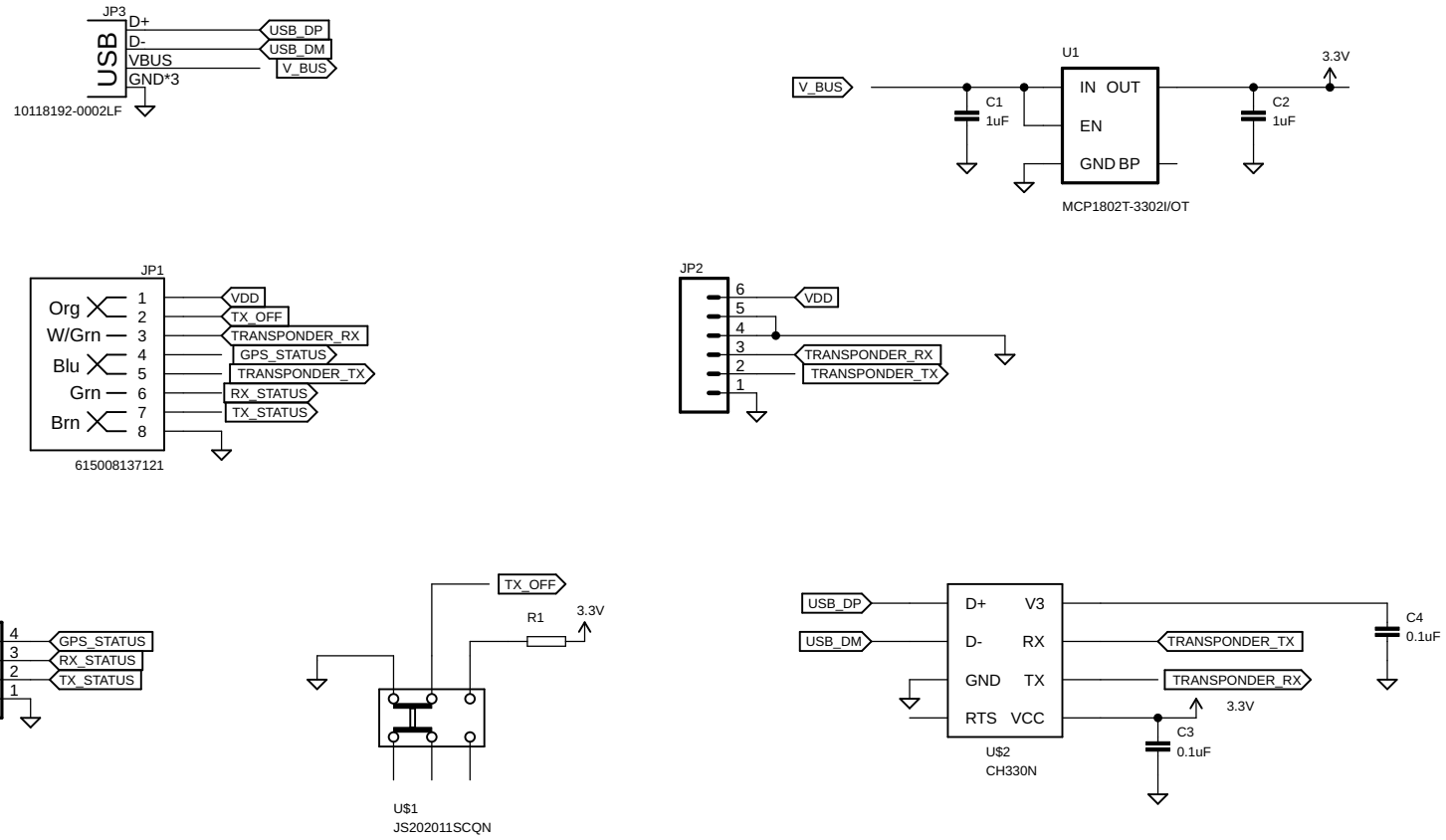

MAIANA™ AIS Transponder
Copyright © 2015-2020 Peter Antypas
Licensed under GPLv3

Breakout for board 9.3

rj45-breakout-10.0

11/29/20 3:44 PM

Sheet: 1/1